ESCUBEDO CONNECTION SYSTEMS

PRODUCT DATASHEET

26231**

6.3 (.250) TYPE SERIES · FLAGS

TP2

Specification Flag receptacle housings

Ways 1

Thermal Characteristics

Part nr.	Raw material	Color	Flammability Class (UL 94)	Glow Wire Test (GWT) (IEC60695-2-11)	Glow Wire Flammability Index (IEC60695-2-12)	RTI electrical (Max. Operating Temp.)
2623110	PA66V2	Natural	V2	(T.B.D.)	850ºC	105ºC
2623130	PA66V0	Natural	V0	(T.B.D.)	960ºC	140ºC
2623140	PA6V2NF	Natural	V2	(T.B.D.)	960ºC	130ºC
2623160	PAV0NF	Natural	V0	(T.B.D.)	960ºC	120ºC

For other materials and colors ask to: info@escubedo.com

Compatible terminals 5838.**, 5839.**, 5834.**, 5835.**, 5837.**

Drawing

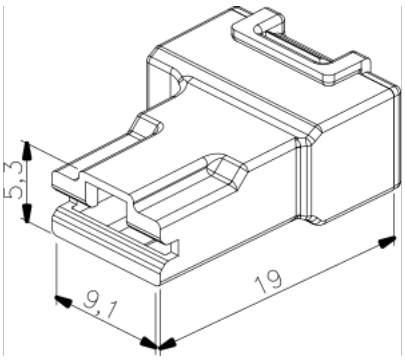

Disclaimer

Data obtained from Escubedo Laboratory essays, using own methodology, cablings, equipment and original crimping tools, done in laboratory conditions and following the indicated standards, errors and omissions excepted. This document has no contractual meaning and it is publicised only for informative purposes. It can be changed without prior notice. The end customer has the sole responsibility to check these characteristics in its environment and with its own components, manufacturing methods and equipment. See also the full range product overview if available. For further information please visit our web site or contact us

Rev. Nr.	Concept	Date	Created/Revised	Approved
A1	Datasheet generated automatically [A1]	2026-10-14	O.Roura (Engineering Dept.)	E.Roura (Laboratory Dept.)

Escubedo Connection Systems, S.A.U. · 17843 Riudellots de la Creu · Girona · Spain
Tel.: 34 972 171 706 · Fax: +34 972 171 714 · info@escubedo.com · www.escubedo.com